<u>Interfacing Bluefish to SB Reeflights (PWM compatible drivers ONLY):</u>

What you will need:

- Bluefish Controller
    - Mini Bluefish will work if you only want LED control and no future expandability with Bluefish expansion modules. Also this model doesn't include an enclosure.
- SB Reeflight w/ PWM drivers. Ramping Elite or Wifi Extreme. Driver will say "PWM" on the module. This mod will NOT work for lights with 0-10V analog only control (Basic, and timer).

- Interface module (Described below how to make)
    - Prototype box
    - 5V supply
    - 74LS04 inverter IC
    - 3.5mm 3 conductor cables/jacks (interfacing to Bluefish)
    - 3.5mm 4 conductor cables/jacks (interfacing to SB Reeflights)

SB Reeflights PWM Drivers:

- The PWM drivers in SB reeflights run on 5V or 10V PWM. The following is a measurement out of the Elite Ramping built in controller. It actually only outputs 0-4V PWM. This is with a 25% brightness setting:
- 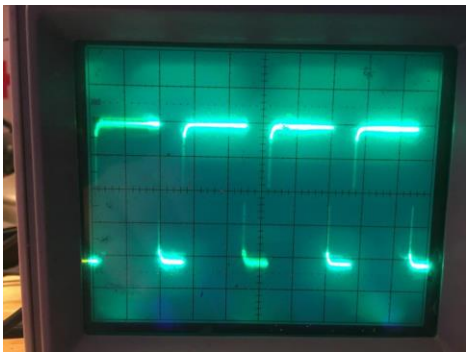
- Also the PWM is inverted from typical control. Where a constant LOW is 100% ON, and a constant HIGH is 0% OFF. The Bluefish Controller PWM is the inverse of this and shown here for the same 25% brightness setting:
- 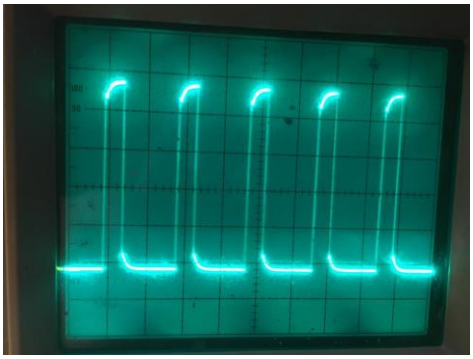
- **<u>To make the Bluefish compatible with the SB Reeflights PWM drivers, an inverter circuit must be used!</u>**

Bluefish Controller Configuration:

- The output channels **<u>MUST be configured to 5V PWM</u>** when connecting to the interface circuit. See Bluefish documentation on how to set internal jumpers.
- If using <u>bluefish mini</u>, only available setting is 3.3V PWM. The interface circuit will convert 3.3V PWM to 5V PWM automatically.

Interface Circuit:

What you will need:

- Prototype box/circuit board (Amazon: http://www.amazon.com/gp/product/B00M2CLI8W)
-
- 5V power supply (Amazon: http://www.amazon.com/gp/product/B00GUO5WUI)
- 14 Pin DIP Socket (optional) (Amazon: http://www.amazon.com/uxcell-10pcs-Socket-Adapter-Solder/dp/B0079SJEJE)
- 74LS04 Hex Inverter (DIP14 package) (Available on ebay, amazon, etc)
- Soldering iron, solder, and soldering skills
- 2x 3.5mm 4 conductor audio jacks (SB Reeflight interface)
- 3x 3.5mm 3 conductor audio jacks (Bluefish Interface)

The circuit:

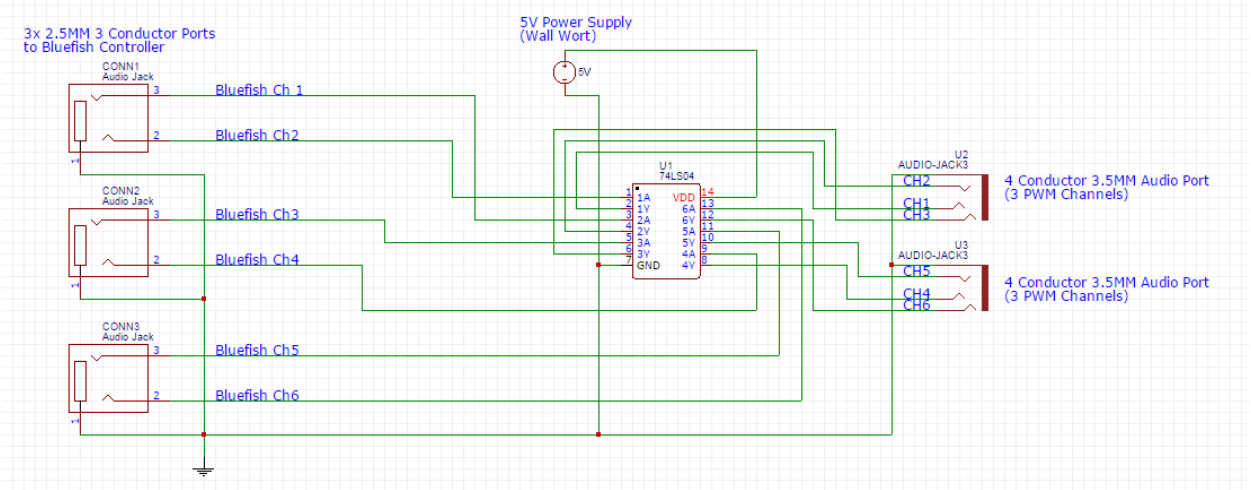

- Very basic inverter circuit that will convert the 5V PWM to a 5V inverted PWM signal for SB Reeflight PWM drivers.
- Each 3.5mm audio jack out of the Bluefish controller has 2 PWM channels and 1 ground. Above circuit combines the 6 output channels into 2 3-channel outputs. This allows you to control 2 sets of SB reef lights. Multiple lights can be driven from a single 3-channel PWM channel.
- 4 conductor 3.5mm audio jacks/cables used to interface to SB Reeflights. Runs 3 PWM channels (Blue, White, Moon) over a single cable. Easy connection and interface. 4 conductor splitters available online to make it easy to drive multiple units.
- Optional: put a 10uF tantalum or similar bulk cap between +5V and gnd.

Interfacing to PWM Drivers:

- There are 2 types of PWM drivers in a SB Reeflight. 2 wire interface (red/black) and 4 wire (white ribbon cable). This section will describe how to interface to both versions.

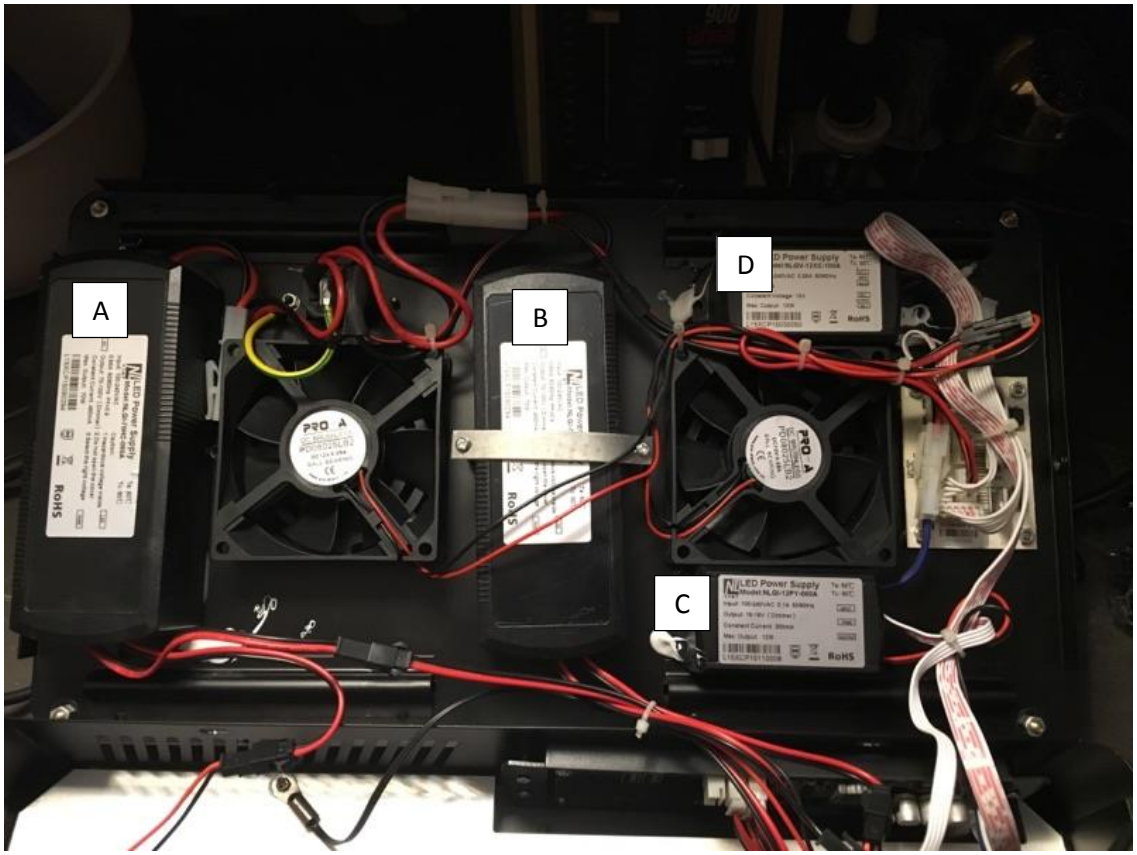

- Above shows the 4 power supplies in a 16” ramping unit for reference:
    - A – PWM driver for white or blue channel, 2 wire PWM interface
    - B – PWM driver for white or blue channel, 2 wire PWM interface
    - C – PWM driver for moon channel, 4 wire PWM interface
    - D – 12V supply for fans/aux

Interfacing to 2 wire PWM Drivers:

- There are 3 2-wire interfaces out of the driver. Input AC, output LED, and PWM in. Find the 2 wire connection that goes to the internal controller. Remove this connection to the internal controller.
- Attach the Bluefish PWM signal to this control line with the following pinout:
    - Black – GND
    - Red – Input PWM signal

Interfacing to 4 wire PWM Drivers:

- There is one 4-wire interfaces out of the driver. This white ribbon cable should be attached to the internal light controller. Remove the cable connection from the internal controller.
- Attach the Bluefish PWM signal to this control line with the following pinout:
    - Outside 2 pins are GND, connect together.
    - Inside 2 pins are PWM input signal, connect together.

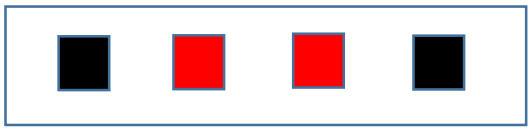

SB Reeflight Modding Suggestions:

- To make connections to PWM drivers easy and revertible consider using the following connectors:
    - For interfacing to the 2 wire drivers search eBay for “JST 2.54 SM 2-Pin Connector”

    - For interfacing to the 4 wire PWM drivers search eBay for “4-Pin XH2.54 2.54mm Connector”

    - Use 4 conductor 3.5 mm audio jacks to interface 3 PWM channels per light. Clean installation and easy to install with easy modification of chassis. Search eBay for “3.5mm Panel Mount Stereo Jack - 4 Conductor”

- Keep the internal controller connected to the unit’s fan. This will still be needed to control the fan and keep the unit cool.
- On ramping units, set all outputs to 0 and turn off screen by pressing the left arrow.